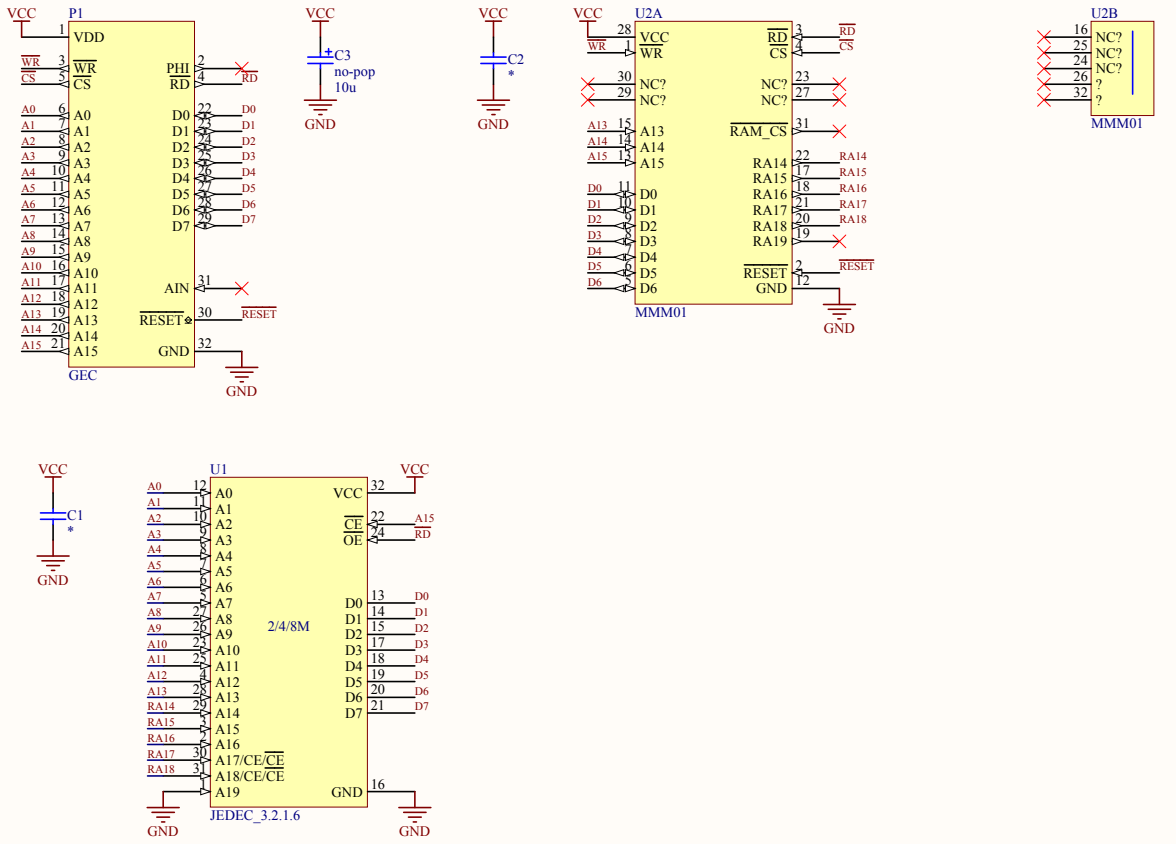

Game Boy (Color) PCB Documentation		
PCB Name: DMG-M-PEAN PCB Revisions: 10	Created By: Tauwasser www.tauwasser.eu	
File: DMG-M-PEAN.SchDoc	Date: 12 May 2015	Document Revision: 1.0