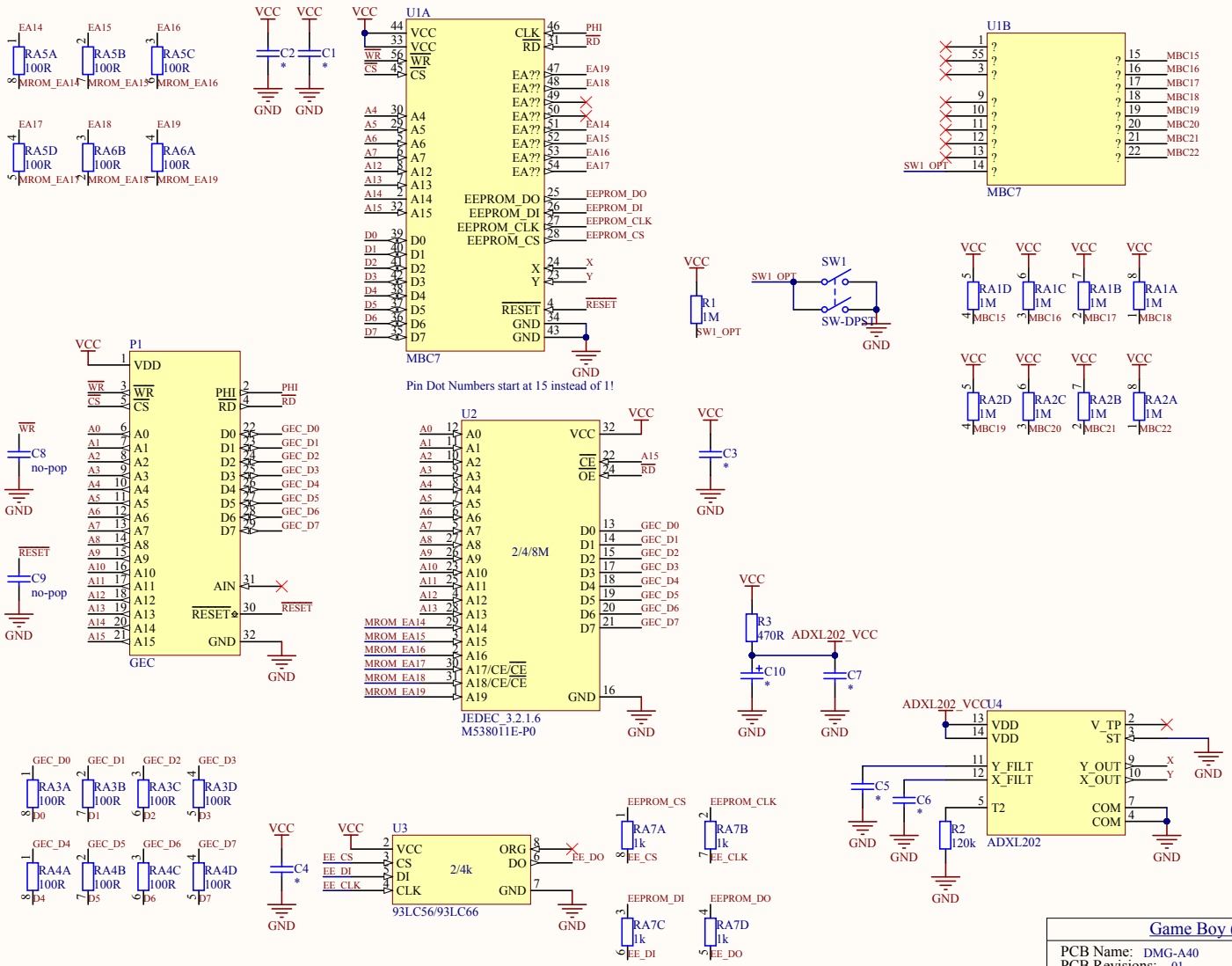
EA14
EA15
EA16
RA5A 100R MROM_EA14
RA5B 100R MROM_EA15
RA5C 100R MROM_EA16
EA17
EA18
EA19
RA5D 100R MROM_EA17
RA6B 100R MROM_EA18
RA6A 100R MROM_EA19
VCC
C2 *
C1 *
GND
U1A
MBC7
Pin Dot Numbers start at 15 instead of 1!
U1B
MBC7
SW1_OPT
R1 1M SW1_OPT
SW1
SW-DPST
RA1D 1M MBC15
RA1C 1M MBC16
RA1B 1M MBC17
RA1A 1M MBC18
RA2D 1M MBC19
RA2C 1M MBC20
RA2B 1M MBC21
RA2A 1M MBC22
P1
GEC
C8 no-pop
C9 no-pop
U2
JEDEC_3.2.1.6
M538011E-P0
2/4/8M
C3 *
R3 470R
ADXL202_VCC
C10 *
C7 *
U4
ADXL202
C5 *
C6 *
R2 120k
RA3A 100R D0
RA3B 100R D1
RA3C 100R D2
RA3D 100R D3
RA4A 100R D4
RA4B 100R D5
RA4C 100R D6
RA4D 100R D7
C4 *
U3
93LC56/93LC66
2/4k
RA7A 1k EE_CS
RA7B 1k EE_CLK
RA7C 1k EE_DI
RA7D 1k EE_DO
Game Boy (Color) PCB Documentation
PCB Name: DMG-A40
PCB Revisions: 01
Created By: Tauwasser
www.tauwasser.eu
File: DMG-A40.SchDoc
Date: 05 Sep 2015
Document Revision: 1.0